EA26-RVT

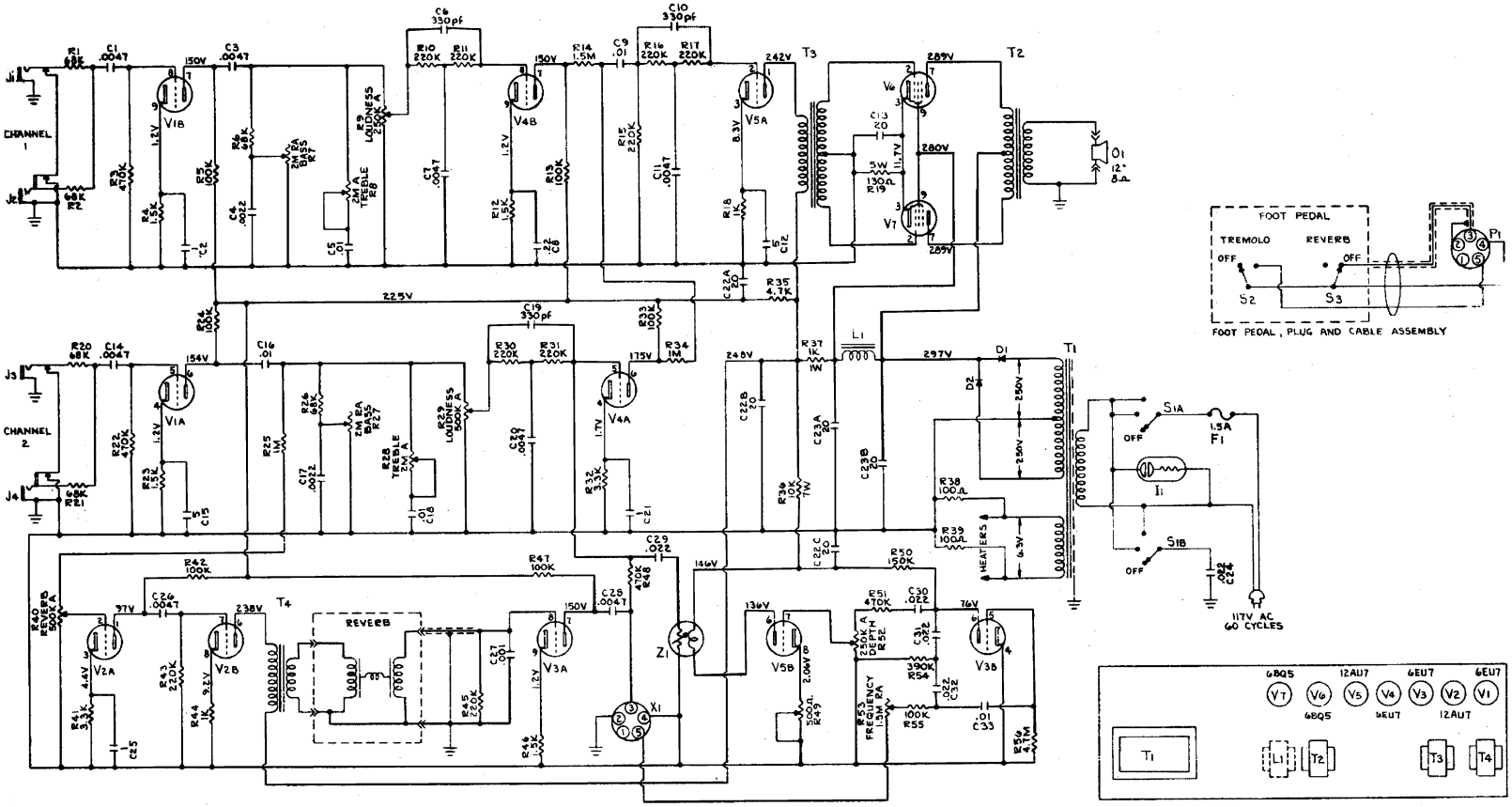

T1	TF-105T-1	Power Transformer
T2	TF-504-C	Output Transformer
T3	TF-1001D-1	PP Driver Transformer
T4	TF-E404	Reverb Transformer
L1	TF-1003-C	Filter Choke
S1A,B	SW-899-1	Switch - SPST Rotary
S2,S3	SW-8204	Switches - SPST
I1	PL-35R	Pilot Light (Neon) w/clip
X1	CN-78PCG-5	Foot Pedal Socket
P1	CN-91MPM-5L	Foot Pedal Plug
D1,D2	DI-404	Diode - 800 PIV

R9,R52	CBA-4008	Control - 250K, Audio (Loudness & Depth)
R8,R28	CBA-811-3702-1	Control - 2 meg, Audio (Treble)
R29,R40	CBA-4007	Control - 500K, Audio (Loudness & Reverb)
R53	CBA-311-3711-1	Control - 1.5 meg, RA (Frequency)
R7,R27	CBA-812-222-1	Control - 2 meg, RA (Bass)
R49	CS-23351	Control - 500 ohm, WW