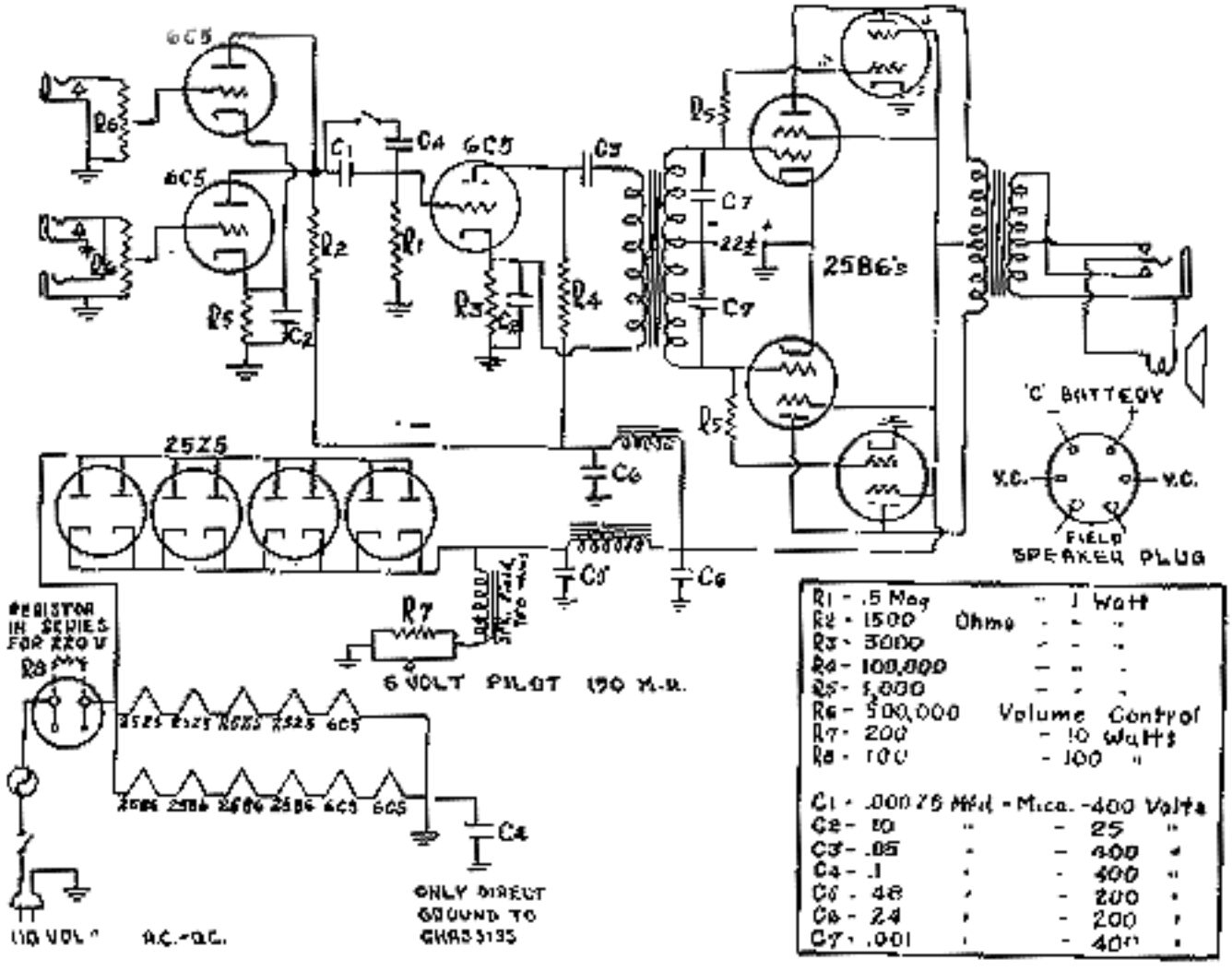

Gibson Model EH-150.