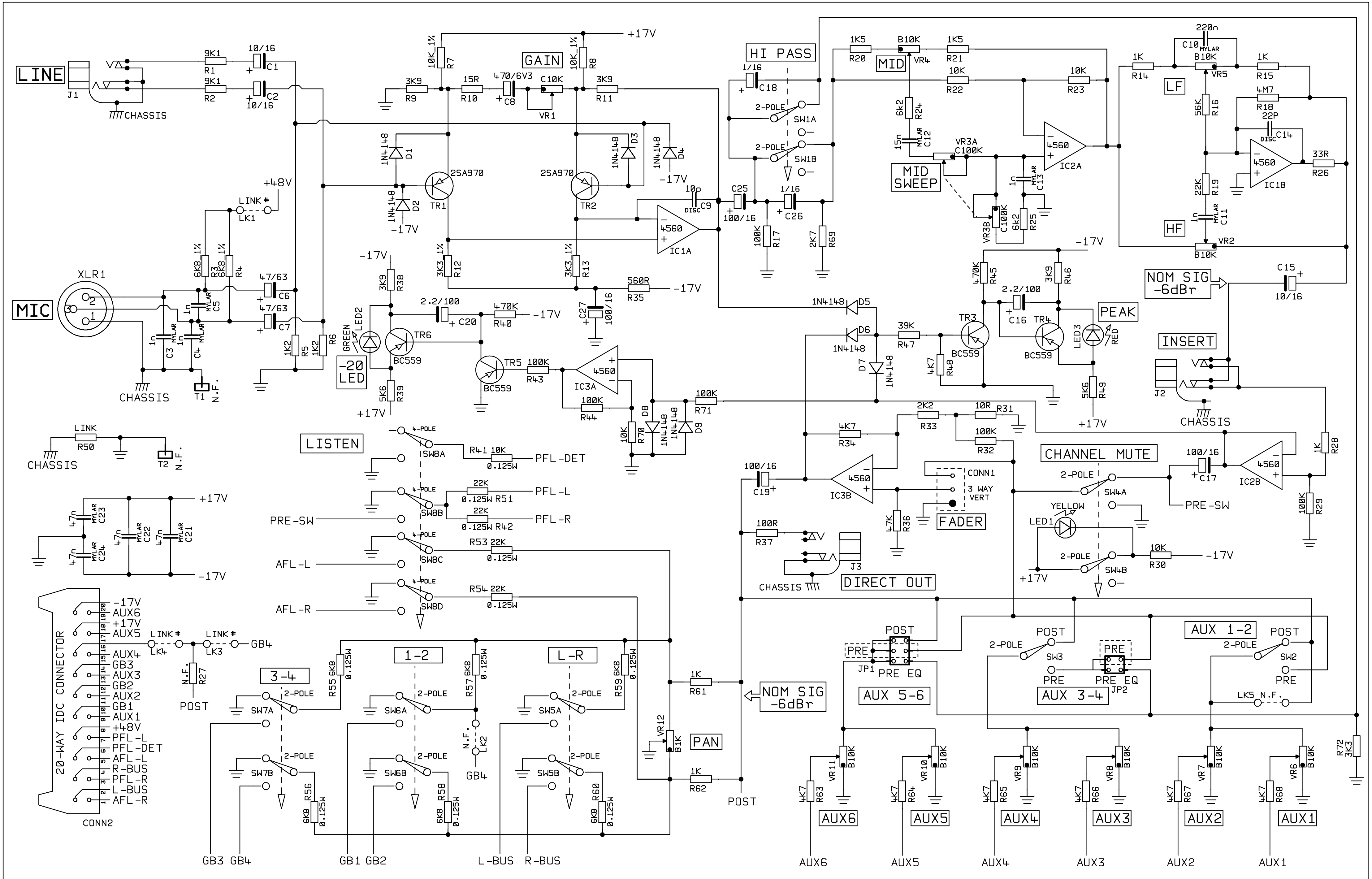

STUDIOMASTER DIAMOND LTD		TITLE	MONO INPUT CIRCUIT		FILE NAME R3C1-3.DGM
PRODUCT	TRILOGY (R3)	PART 1 OF 1			ISSUE No 9603031-2 PCBUSP81
VERSIONS		DRN BY	P.A.	DATE 08-11-96	